Wolf Safety Lamp Company

WOLF ATEX Turbolite RANGE

OPERATION AND MAINTENANCE INSTRUCTIONS

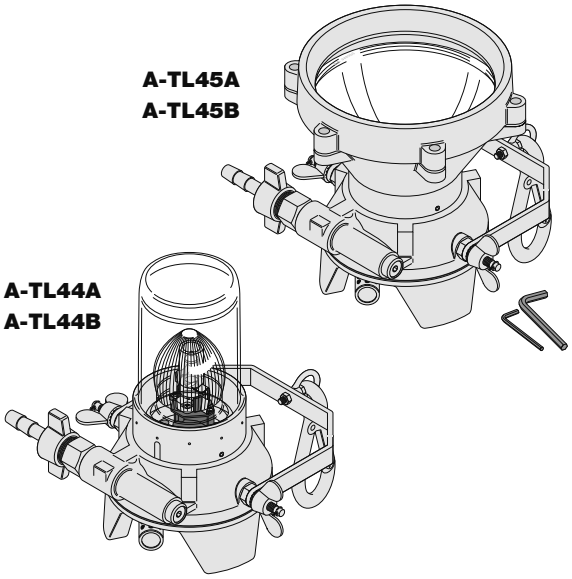

0598

1180

Wolf ATEX Turbolite Range Operation and Maintenance Instructions

Approvals

EU Declaration of Conformity

The Wolf ATEX Turbolite is powered with compressed air that, once regulated, drives the turbine wheel fitted to the shaft. The magnet, also fitted to the shaft, rotates within windings, generating electricity and powering a 24v 250watt tungsten halogen bulb. The **A-TL44A/B** Baylight provides all round illumination; the **A-TL45A/B** Floodlight gives directional illumination, with the suffix denoting **A – Aluminium** construction or **B – Brass** construction.

A-TL44A, A-TL45A, A-TL44B and **A-TL45B** are approved for Group II surface applications, as Category 2 equipment, for zone 1 & 2 potentially explosive gases, vapours, mists and dusts, where T4 temperature class permits.

Approval code: **Ex II 2 GD II T4 T135°C Ta=-20°C to +55°C**

A-TL44B and **A-TL45B** are approved for Group I mining applications, as Category M2 equipment.

Approval code: **I M2**

Conditions of Certification (X)

- clean, dry compressed air must be used, that is free from contamination with hazardous gas, dust or fibres.
- anti-static air hose must be used (≥10⁷ Ω ≤10⁹ Ω, to BS 2050)
- in dust atmospheres the silencer must be replaced by an anti static hose, ensuring exhaust air is piped to a safe/non hazardous area, preventing dust deposits from being disturbed. Performance of the lamp may be reduced dependant on hose length.

These lamps are not solidly earthed, precautions against the hazards associated with static electricity should be taken.

Notified Body: SGS FIMKO OY,, P.O. Box 30 (Säkarinmenentie 3) 00211 HELSINKI, Finland. Notified Body number: **0598**

These lamps are not solidly earthed, precautions against the hazards associated with static electricity should be taken.

area, preventing dust deposits from being disturbed. Performance of the lamp may be reduced dependant on hose length.

EU Type examination certificate: **CML18ATEX9374X**

Standard applied: EN 1127-1:2019*, (+EN 1127-1:2011)

*A subsequent review of the harmonised standards demonstrated the Wolf ATEX Turbolites are not affected by the format changes to maintain compliance.

Caution – Polycarbonate lens, check atmosphere in Ex area.

Ingress protection level: **IP66** (when running) to EN60529:1992.

IP40 (when not running, keep protected from ingress of water/dust).

This declaration is issued under the sole responsibility of The Wolf Safety Lamp Company.

Alex Jackson – Managing Director
Wolf Safety Lamp Company, Sheffield S8 0YA. UK
Dated 01 December 2021

UK Declaration of Conformity

The Wolf ATEX Turbolite meets all the statutory requirements of the Equipment and Protective Systems Intended for Use in Potentially Explosive Atmospheres Regulations 2016, UKSI 2016/1107 as amended by UKSI 2019/696 by virtue of the issued UKEX type examination certificate, demonstrating compliance with all relevant designated standards and essential health and safety requirements.

Approval code: **Ex II 2 GD II T4 T135°C Ta=-20°C to +55°C**

A-TL44B and **A-TL45B** are approved for Group I mining applications, as Category M2 equipment.

Approval code: **I M2**

Conditions of Certification (X)

- clean, dry compressed air must be used, that is free from contamination with hazardous gas, dust or fibres.
- anti-static air hose must be used (≥10⁷ Ω ≤10⁹ Ω, to BS 2050)
- in dust atmospheres the silencer must be replaced by an anti static hose, ensuring exhaust air is piped to a safe/non hazardous area, preventing dust deposits from being disturbed. Performance of the lamp may be reduced dependant on hose length.

These lamps are not solidly earthed, precautions against the hazards associated with static electricity should be taken.

Enclosure NEMA 4 (When running)

Alex Jackson – Managing Director
Wolf Safety Lamp Company, Sheffield S8 0YA. UK
Dated 01 December 2021

Designated Standards Applied: EN1127-1:2019

Alex Jackson – Managing Director
Wolf Safety Lamp Company, Sheffield S8 0YA. UK
Dated 01 December 2021

UK Type examination certificate: **CML 21UKEX9647X**

Approval Body: SGS Baseefa Ltd, Rockhead Business Park, Staden Lane, Buxton, SK17 9RZ. UK. Approval body number: **1180**.

These lamps are not solidly earthed, precautions against the hazards associated with static electricity should be taken.

- clean, dry compressed air must be used, that is free from contamination with hazardous gas, dust or fibres.
- anti-static air hose must be used (≥10⁷ Ω ≤10⁹ Ω, to BS 2050)
- in dust atmospheres the silencer must be replaced by an anti static hose, ensuring exhaust air is piped to a safe/non hazardous area, preventing dust deposits from being disturbed. Performance of the lamp may be reduced dependant on hose length.

Conditions of Certification (X)

Approval code: **I M2**

A-TL44B and **A-TL45B** are approved for Group I mining applications, as Category M2 equipment.

Approval code: **Ex II 2 GD II T4 T135°C Ta=-20°C to +55°C**

A-TL45A, A-TL44A, A-TL44B and **A-TL45B** are approved for Group II surface applications, as Category 2 equipment, for zone 1 & 2 potentially explosive gases, vapours, mists and dusts, where T4 temperature class permits.

Approval code: **Ex II 2 GD II T4 T135°C Ta=-20°C to +55°C**

A-TL44B and **A-TL45B** are approved for Group I mining applications, as Category M2 equipment.

Approval code: **I M2**

Conditions of Certification (X)

- clean, dry compressed air must be used, that is free from contamination with hazardous gas, dust or fibres.
- anti-static air hose must be used (≥10⁷ Ω ≤10⁹ Ω, to BS 2050)
- in dust atmospheres the silencer must be replaced by an anti static hose, ensuring exhaust air is piped to a safe/non hazardous area, preventing dust deposits from being disturbed. Performance of the lamp may be reduced dependant on hose length.

These lamps are not solidly earthed, precautions against the hazards associated with static electricity should be taken.

Standard applied: EN 1127-1:2019*, (+EN 1127-1:2011)

*A subsequent review of the harmonised standards demonstrated the Wolf ATEX Turbolites are not affected by the format changes to maintain compliance.

Caution – Polycarbonate lens, check atmosphere in Ex area.

Ingress protection level: **IP66** (when running) to EN60529:1992.

IP40 (when not running, keep protected from ingress of water/dust).

This declaration is issued under the sole responsibility of The Wolf Safety Lamp Company.

Alex Jackson – Managing Director
Wolf Safety Lamp Company, Sheffield S8 0YA. UK
Dated 01 December 2021

UK Declaration of Conformity

The Wolf ATEX Turbolite meets all the statutory requirements of the Equipment and Protective Systems Intended for Use in Potentially Explosive Atmospheres Regulations 2016, UKSI 2016/1107 as amended by UKSI 2019/696 by virtue of the issued UKEX type examination certificate, demonstrating compliance with all relevant designated standards and essential health and safety requirements.

Approval code: **Ex II 2 GD II T4 T135°C Ta=-20°C to +55°C**

A-TL44B and **A-TL45B** are approved for Group I mining applications, as Category M2 equipment.

Approval code: **I M2**

Conditions of Certification (X)

- clean, dry compressed air must be used, that is free from contamination with hazardous gas, dust or fibres.
- anti-static air hose must be used (≥10⁷ Ω ≤10⁹ Ω, to BS 2050)
- in dust atmospheres the silencer must be replaced by an anti static hose, ensuring exhaust air is piped to a safe/non hazardous area, preventing dust deposits from being disturbed. Performance of the lamp may be reduced dependant on hose length.

These lamps are not solidly earthed, precautions against the hazards associated with static electricity should be taken.

UK Type examination certificate: **CML 21UKEX9647X**

Approval Body: SGS Baseefa Ltd, Rockhead Business Park, Staden Lane, Buxton, SK17 9RZ. UK. Approval body number: **1180**.

These lamps are not solidly earthed, precautions against the hazards associated with static electricity should be taken.

Designated Standards Applied: EN1127-1:2019

Alex Jackson – Managing Director
Wolf Safety Lamp Company, Sheffield S8 0YA. UK
Dated 01 December 2021

Enclosure NEMA 4 (When running)

Housing Cover Removal from Manufacturing date code 0409 (2004, September)

To remove the generator housing cover (A-216/212), remove the screws (A-18), the assembled rotor is fitted to the housing cover. Do not prise the housing cover off this would damage the casting and 'O' ring seal. The bearing in the generator housing has an adhesive on the outer ring (see fig 1b), also the attraction of the magnet will resist removal. Light tapping with a plastic or hide mallet on the rim of the housing cover will be required to release the cover.

Disassemble the components from the rotor shaft to get access to the bearing retaining ring (A-868) and the 2 x bearing retaining screws(A-873), which allow the rotor shaft with sealed bearing to be removed from the housing cover.

Before reassembly ensure the bearing outer race and generator housing bearing bore are clean. Do not use abrasive cleaners. A small amount of loctite 222 adhesive or equivalent thread locking adhesive should be applied to the generator housing bearing bore. Make sure that no small ferrous objects have been attracted to the magnet.

Wolf Safety Lamp Company

Wolf ATEX Turbolite Range Parts List

Order Code	Description
A-TL45A	**ATEX Turbolite Floodlight**
A-6	Screw, Air Inlet Plate A-105 (2 per plate)
A-7	Screw for Stator (3)
A-8	Wing Nut for A-11 (2)
A-11	Bridle Bolt (2)
A-13S	Bridle with Safety Hook
A-18	Stainless Steel Fastening Screw (9)
A-28	Lock Nut for Regulating Screw
A-29	Regulating Screw
A-33	Air Filter Sieve
A-34	Connecting Piece
A-38	Turbine Wheel
A-52	Insulating Bush (2)
A-54	Stator Winding
A-57M	Reflector Matt
A-57P	Reflector Polished
A-68	Pair of Pressure Regulating Keys
A-72	Lock Washer for Bridle (2)
A-74	Lockscrew for Reflector Head
A-77	O' Ring Seal for Reflector Head
A-80	Magnet
A-87	Washer for Bulb Holder Studs (2)
A-98	Collar for Lockscrew-Piston Chamber
A-105	Air Inlet Plate (3)
A-106	O' Ring Seal for Air Inlet Plate (3)
A-109	Air Regulating Plate
A-110	Piston complete
A-113	Piston Spacer
A-114	Spring for Piston (silver passivated)
A-115	Diaphragm
A-116	Lockscrew for Piston Chamber
A-129	Bulb 24V 250W Tungsten Halogen
A-133	Connecting Tube

Order Code	Description
A-134	Overthrow Nut
A-139	Grooved Rubber Washer
A-140	Glass Disc 15mm (toughened)
A-151	Long Spring Bulbholder
A-152	Short Spring Bulbholder
A-159	Bulb 24V 250W Tungsten Halogen High Output
A-170	Key for Fastening Screws
A-18	
A-171	Key for Lockscrew
A-216	Aluminium Housing Cover
A-226	Aluminium Generator Housing
A-623A	Aluminium Reflector Head 6 lug
A-623AC	Aluminium Reflector Head 6 Lug Assembly
A-624A	Aluminium Lens Ring 6 Lug
A-861	Circlip for Rotor Shaft
A-862	Sealed Bearing (2)
A-863	Spacer for Turbine
A-865	Spacer for Magnet
A-866	Rotor Shaft Lock Collar
A-867	Waved Spring Washer for Bearing (2)
A-868	Bearing Retaining Ring
A-869	Silencer
A-870	Retainer, Air Filter Sieve
A-871	Connecting Stud for Bulbholder
A-872	Bulbholder Nut (8)
A-873	Bearing Retaining Ring Screws (3)
A-874	Rotor Shaft
A-875	Nut for Rotor Shaft
A-876	Tab Washer (2)
A-882	Generator Housing Seal
A-86	Wing Nut Retaining Clip (2)
A-884	Shakeproof Washer (6)
A-903	Self Tapping Screw
A-900	Bulbholder Assembly

Order Code	Description
A-908	Glass Tube with Bayonet Clip
A-TL44A	**ATEX Turbolite Baylight**
A-16	Metal Washer
A-19	Ball Glass (A-TL44)
A-158	Grooved Rubber Washer
A-163A	Lockscrew Ring/Guard (A-TL44A-Aluminium)
A-TL45B	**ATEX Turbolite Floodlight**
A-212	Brass Housing Cover
A-223	Brass Generator Housing
A-623B	Brass Reflector Head 6 Lug
A-623BC	Brass Reflector Head 6 Lug Assembly
A-624B	Brass Lens Ring 6 Lug
A-TL44B	**ATEX Turbolite Baylight**
A-16	Metal Washer
A-19	Ball Glass (A-TL44)
A-158	Grooved Rubber Washer
A-163	Brass Lockscrew Ring/Guard (A-TL44B-Brass)

Accessories

A-179	Anti-static Hose 1/2" Bore 18.3 m (60 ft) approx
A-180	Anti-static Hose 1/2" Bore 36.6 m (120 ft) approx
A-146	Key for nut on Rotor Shaft and Retainer, Air Filter Sieve
A-181	Stainless Steel Hose Clips
A-184	Filter/Automatic Drain Valve
A-186	High efficiency Filter/Auto Drain Unit
A-190	Filter Stand
A-300	Folding Tripod Stand
A-880	Setting & Test Device

WOLF SAFETY LAMP COMPANY
Saxon Road Works, Sheffield S8 0YA, England
Tel: +44 114 255 1051
E-mail: info@wolfsafety.com
Website: www.wolfsafety.com

Authorised Representative (EU)2019R1020:
Authorised Representative Service,
77 Camden Street Lower, Dublin, D02 XE80. Ireland

MMD/1.22
DF593
Part No. A-93 issue 9

Operating Instructions

Wolf ATEX Turbolite operating pressure is 5 – 8 bar (70 to 120 psi).

Ideal running and setting pressure, 5.5 bar (80 psi)

The pressure regulator on the lamp compensates for fluctuations in airline pressures. Every Turbolite Airlamp, as supplied, can be connected to a 1/2" bore hose, a 3/4" BSP male thread, or a 3/4" BSP female thread (with limited internal cleanness). The A-TL45A/B is supplied with a matt reflector as standard, a polished reflector can be fitted on request.

Inspection and Maintenance

- ATEX Turbolites are available with **Aluminium – A**, or **Brass – B** construction. Do not mix cast components.
- A damaged airlamp should be withdrawn and repaired in accordance with these instructions, by trained/qualified personnel.
- Airlamps should be inspected, cleaned and tested every three months for regular use, otherwise after every 1000 hours of use. Refer to IEC 60079-17 for guidance on inspection and maintenance.
- The use and/or improper fitting of spare parts will invalidate product certification and the manufacturer's guarantee and responsibility and may cause an unsafe condition. If in doubt contact the Company.

Head Removal and Bulb/Bulb Holder Replacement (fig. 1 & 1a)

To gain access to the bulb, release the lock screw (A-74), and unscrew the reflector head/locking dome from the generator (A-226/A-223).

The 24v 250watt tungsten halogen bi pin capsule bulb (A-129/A-159, type GY6.35) should be handled with care, the pins and pinch are fragile. When the bulb blows the airamp should be switched off immediately and removed from service for bulb replacement. A glass tube (A-908) with bayonet clip is fitted over the bulb to improve bulb life and reduce contamination. To remove, lift one spring clip and rotate the tube clockwise. The bulbholder can be removed by unscrewing the lock nuts (A-872) holding the bulbholder terminals (fig. 1a). On inspection check these nuts are secure to ensure a reliable electrical contact and pressure seal on the insulating bush (A-52).

When re-assembling the ATEX Turbolite, ensure the head is screwed down far enough over the 'O' ring (A-77) or grooved rubber washer (A-158) on the generator to seal the pressurised enclosure, and then lock the enclosure with the lock screw (A-74).

Removal and replacement of the ball glass, A-TL44/B (fig. 1)

See head removal. Inspect ball glass (A-19), do not use if damaged.

Removal and replacement of the glass disc, A-TL45A/B (fig. 1 & 2)

Remove 6 x fastening screws (A-18) retaining the lens ring to gain access to the glass disc (A-140) for cleaning or replacement. Inspect the glass disc, do not use if damaged. The fastening screws are or a special high tensile stainless steel specification.

Setting Generator Voltage (fig. 3)

A setting and testing device is required (A-880) to set or check the generator voltage. Fit to the generator, connect the two wires to the connecting studs for bulbholder (A-871), ensure the wires are not touching the glass tube. Fit the reflector head/ball glass and locking dome, including 'O' ring (A-77). Using the pressure regulator key set (A-68), release the lock nut (A-28), adjust the regulating screw (A-29). When regulating voltage of 23.5 volts is reached turn the air supply on/off three times to ensure regulator setting is stable.

Use of the Silencer and Remote Exhaust (fig. 4)

- For standard use in gas atmospheres follow fig. 4a.
- To operate with reduced noise levels in gas atmospheres follow fig. 4b.
- For dust atmospheres follow fig 4c. Hose must exhaust in a safe area.

Exhaust hose must be anti-static to BS2050. 3/4" (18mm) bore hose will result in minimal loss of performance. Ensure piped exhaust does not cause a hazard.

The Wolf Safety Lamp Co. Ltd has a policy of continuous product improvement. Changes in design may be made without prior notice.

IMPORTANT, the strength of these screws is safety critical, only use specified spare parts. Incorrect fastening of these screws can cause:

- The toughened glass disc to shatter
- The grooved rubber seal to become damaged
- Weakening of the fastening screws.
- Stripping of the threads in the reflector head

Inspection and replacement of generator sealed bearings (fig. 1 & 1b)

To remove the generator housing cover (A-216/A-212), remove 3 x fastening screws (A-18), the assembled rotor is fitted to the housing cover. Do not prise the housing cover off, attraction of the magnet will resist removal. Disassemble the components from the rotor shaft to get access to the bearing retaining ring (A-868) and 3 x bearing retaining screws (A-873), which allow the rotor shaft with sealed bearing to be removed from the housing cover.

Before reassembly make sure that no small ferrous objects have been attracted to the magnet. When replacing the rotor shaft assembly the magnet will be strongly attracted to the stator. Ensure the sealed bearing locates correctly into the generator housing, avoid finger traps between the generator housing and the housing cover.

Assembly is the reverse of the above; check correct orientation of all components. Thread lock (e.g. Loctite 270) should be applied to the bearing retaining ring screws. Sealed bearings and waved spring washers must be replaced as a set (i.e. 2 x A-862 and 2 x A-867). Never re use the circlip (A-861). On inspection and assembly always check the nut for rotor shaft (A-875) is secure, retain with thread lock

Regulator Assembly (fig. 1)

The regulator adjusts the output voltage of the generator. All the regulator parts are correctly aligned and secured by the locking ring (A-870). Do not disturb the regulator unless it ceases to function correctly. If replacement or cleaning of any parts is necessary, check the fabric and beaded rim of the diaphragm (A-115) for deterioration.

Before re-assembly of the regulator, the lockscrew (A-116) with collar (A-98), lock nut (A-28) and regulating screw (A-29) must be removed from the opposite end of the regulator piston chamber. The regulating screw (A-29) and lock nut (A-28) should then be loosely fitted just inside the end of the piston chamber, ready for resetting the pressure regulator.

Use of the Remote Air Supply (fig. 5)

- Remove the generator housing cover (A-216/212), remove 3 x fastening screws (A-18), the assembled rotor is fitted to the housing cover. Do not prise the housing cover off, attraction of the magnet will resist removal. Disassemble the components from the rotor shaft to get access to the bearing retaining ring (A-868) and 3 x bearing retaining screws (A-873), which allow the rotor shaft with sealed bearing to be removed from the housing cover.
- Before reassembly make sure that no small ferrous objects have been attracted to the magnet. When replacing the rotor shaft assembly the magnet will be strongly attracted to the stator. Ensure the sealed bearing locates correctly into the generator housing, avoid finger traps between the generator housing and the housing cover.
- Assembly is the reverse of the above; check correct orientation of all components. Thread lock (e.g. Loctite 270) should be applied to the bearing retaining ring screws. Sealed bearings and waved spring washers must be replaced as a set (i.e. 2 x A-862 and 2 x A-867). Never re use the circlip (A-861). On inspection and assembly always check the nut for rotor shaft (A-875) is secure, retain with thread lock
- Remove the generator housing cover (A-216/212), remove 3 x fastening screws (A-18), the assembled rotor is fitted to the housing cover. Do not prise the housing cover off, attraction of the magnet will resist removal. Disassemble the components from the rotor shaft to get access to the bearing retaining ring (A-868) and 3 x bearing retaining screws (A-873), which allow the rotor shaft with sealed bearing to be removed from the housing cover.
- Before reassembly make sure that no small ferrous objects have been attracted to the magnet. When replacing the rotor shaft assembly the magnet will be strongly attracted to the stator. Ensure the sealed bearing locates correctly into the generator housing, avoid finger traps between the generator housing and the housing cover.
- Assembly is the reverse of the above; check correct orientation of all components. Thread lock (e.g. Loctite 270) should be applied to the bearing retaining ring screws. Sealed bearings and waved spring washers must be replaced as a set (i.e. 2 x A-862 and 2 x A-867). Never re use the circlip (A-861). On inspection and assembly always check the nut for rotor shaft (A-875) is secure, retain with thread lock

Wolf Safety Lamp Company

Fig 1

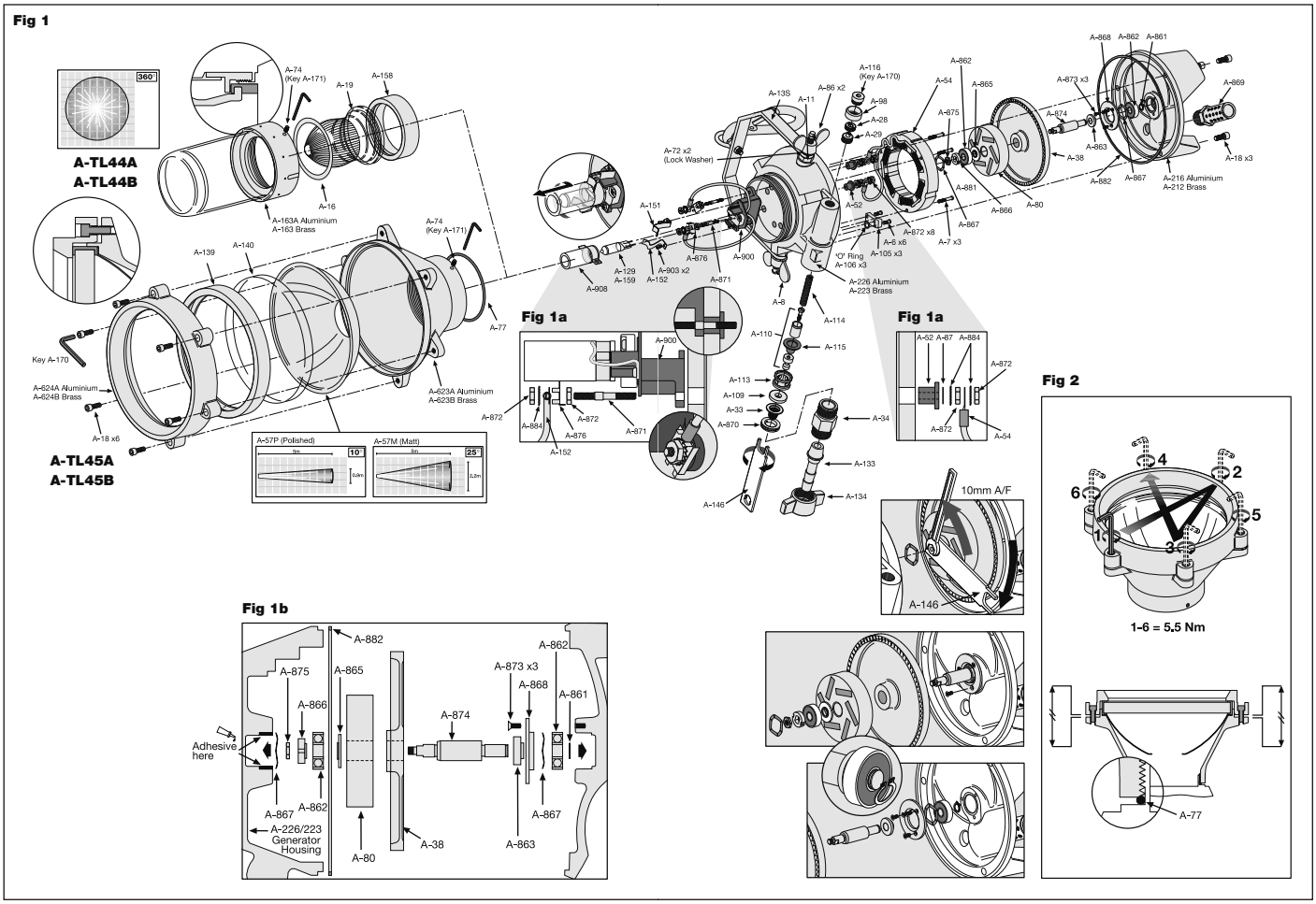

Fig 1b

Fig 2

Fig 3

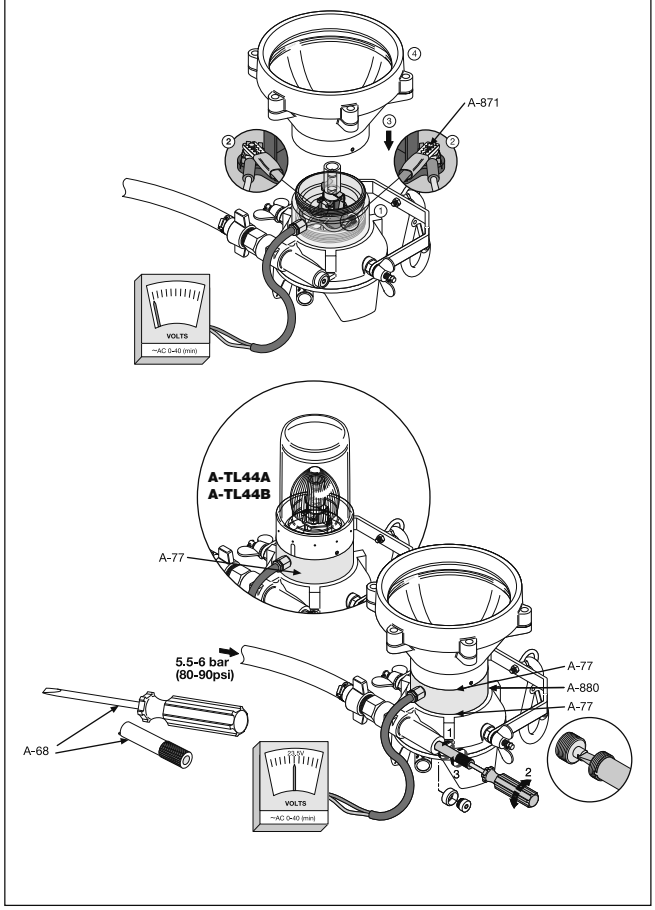

Fig 4

Fig 4a

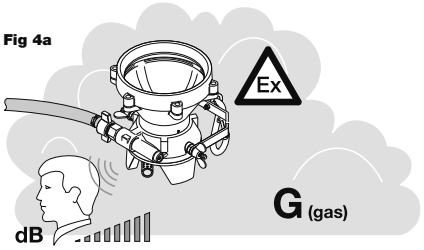

A-TL44A
A-TL44B
A-TL45A
A-TL45B

Fig 4b

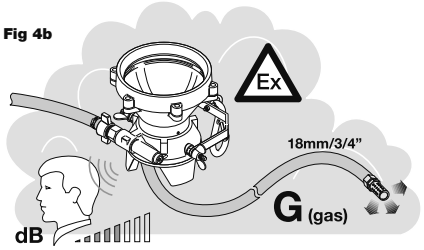
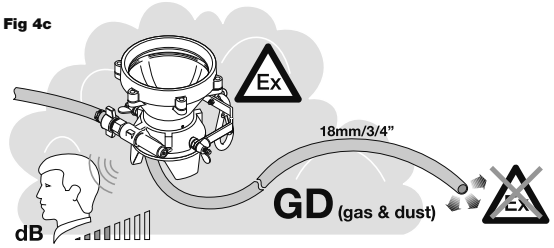
Fig 4c